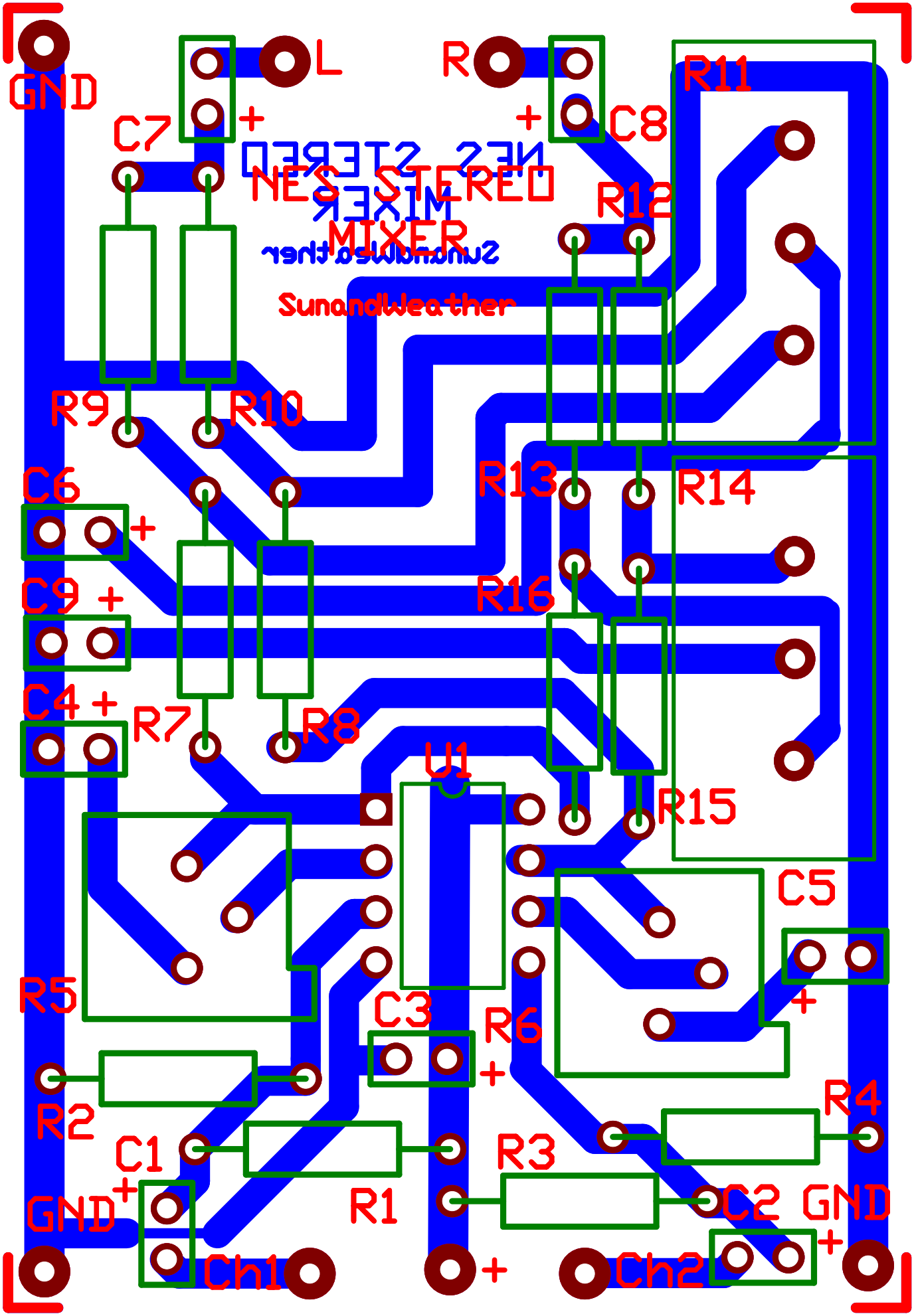
GND
L
R
C7
C8
R11
NES STEREO
MIXER
R12
SunandWeather
R9
R10
C6
R13
R14
C9
R16
C4
R7
R8
U1
R15
C5
R5
C3
R6
R2
R4
C1
R3
R1
C2
GND
GND
Ch1
Ch2